BLANCO

BLANCO ACTIS-S ND

Safety and hygiene
BLANCO mixer taps

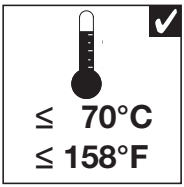

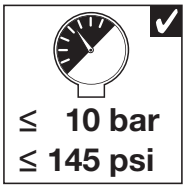

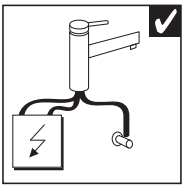

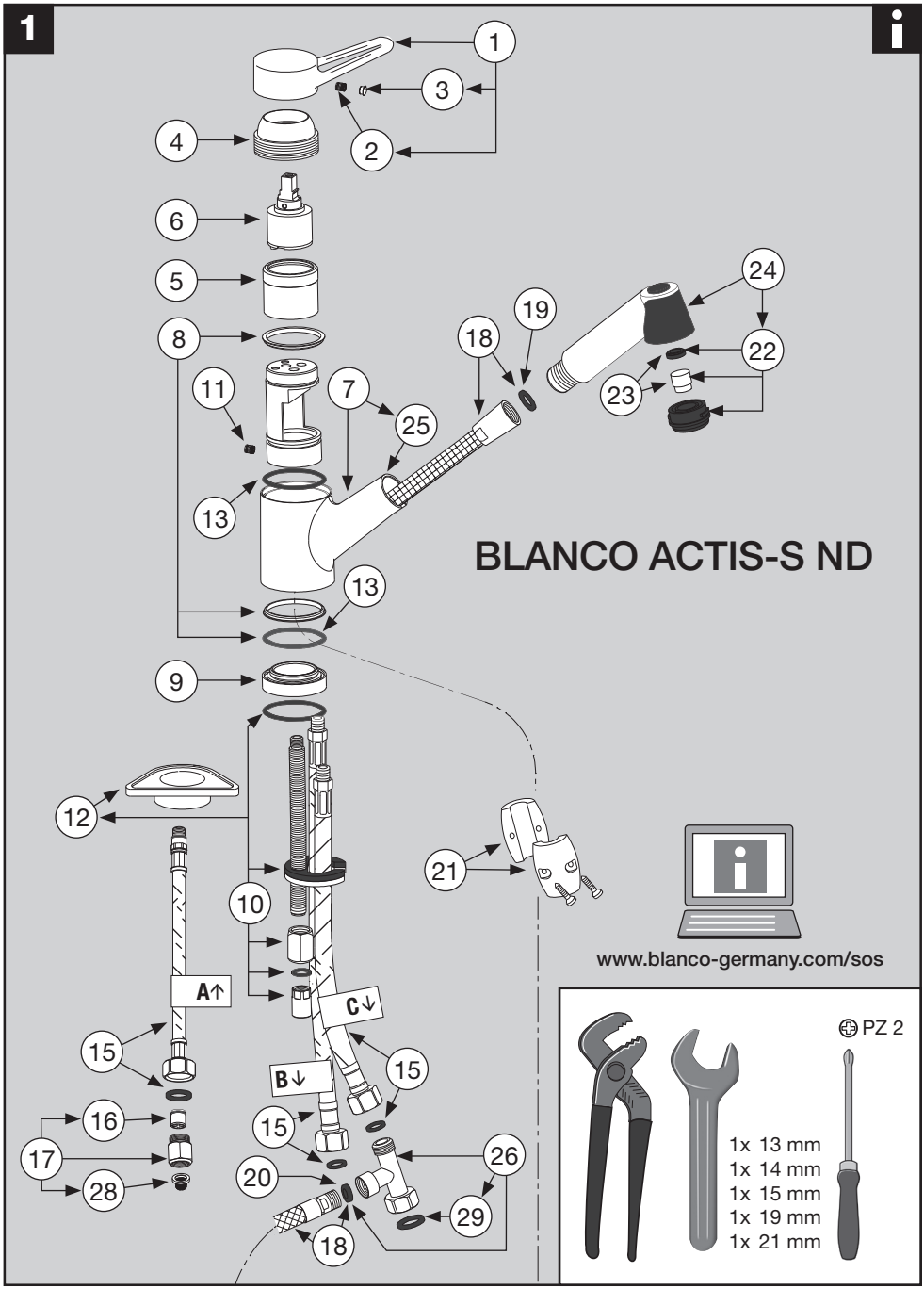
1
BLANCO ACTIS-S ND
www.blanco-germany.com/sos
A↑
B↓
C↓
PZ 2
1x 13 mm
1x 14 mm
1x 15 mm
1x 19 mm
1x 21 mm

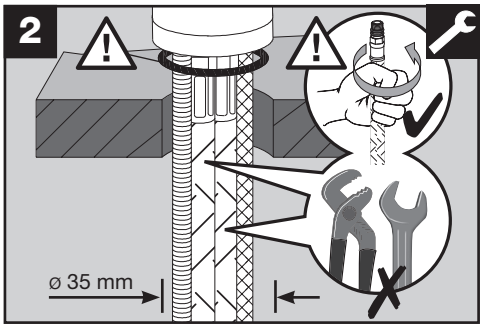
2
ø 35 mm

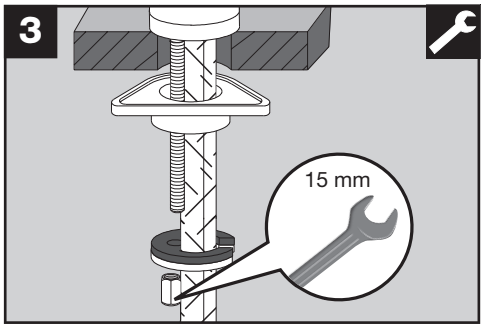
3
15 mm

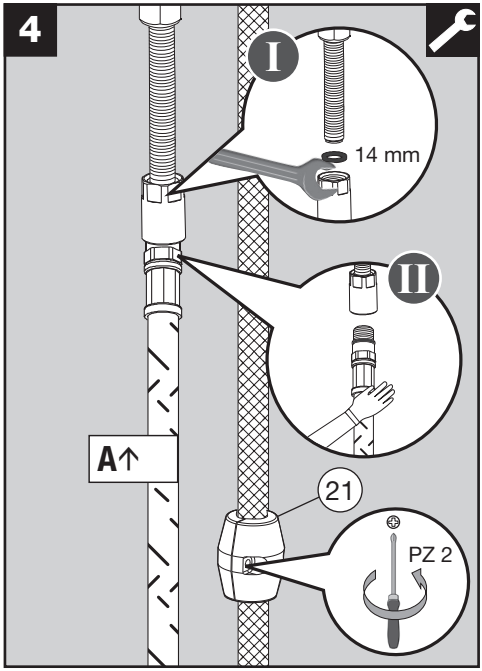
4
I
14 mm
II
A↑
21
PZ 2

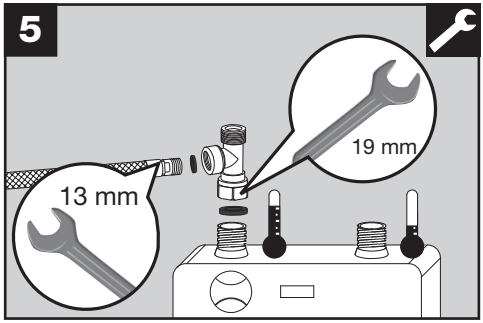
5
19 mm
13 mm

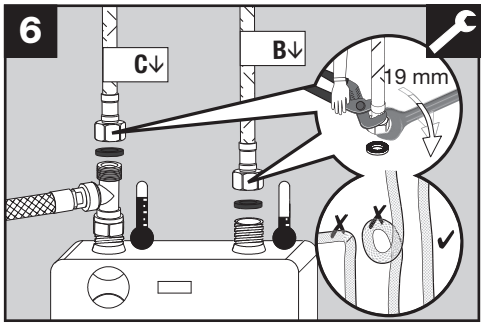
6
C↓
B↓
19 mm

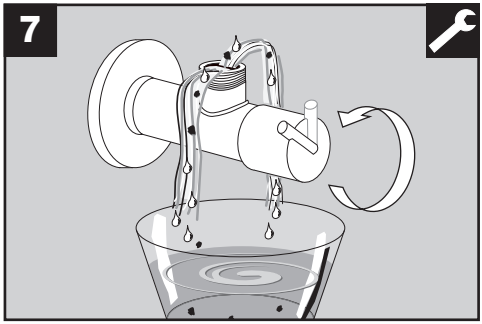
7

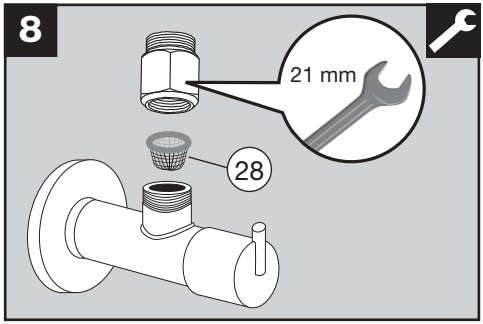
8
21 mm
28

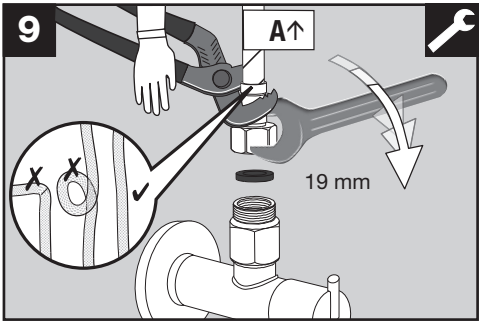
9
A↑
19 mm

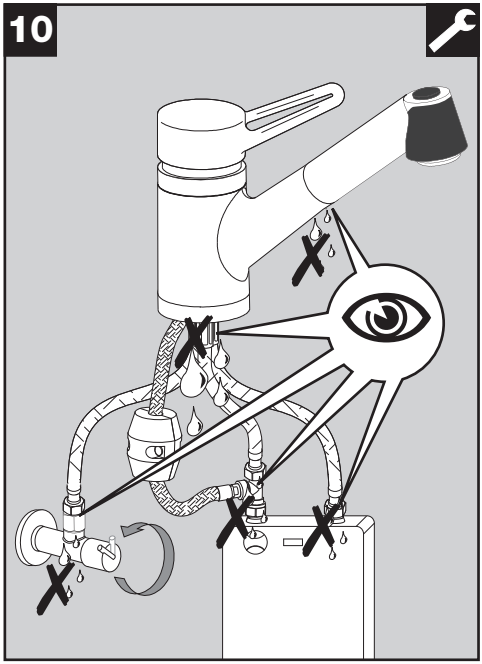
10

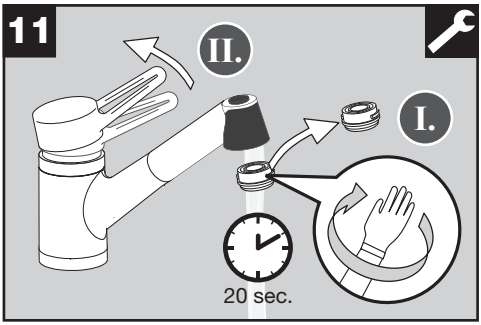
11
II.
I.
20 sec.

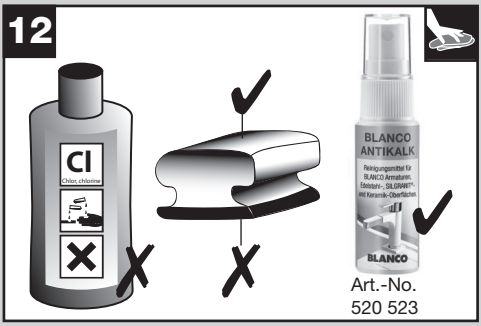
12
Cl
Chlor, chlorine
BLANCO
ANTIKALK
Reinigungsmittel für
BLANCO Armaturen,
Edelstahl-, SILGRANIT®-
und Keramik-Oberflächen
BLANCO
Art.-No.
520 523

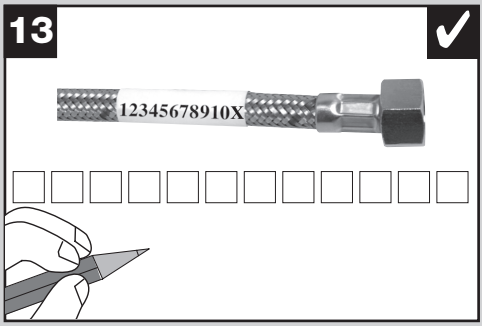
13
12345678910X

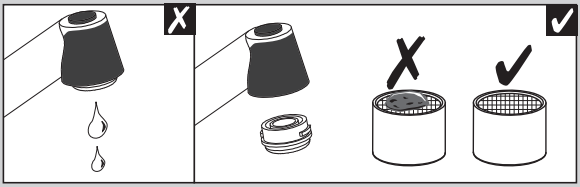

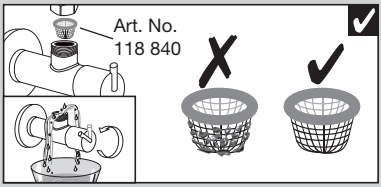
Art. No.
118 840

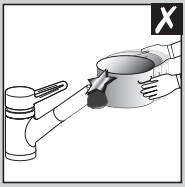

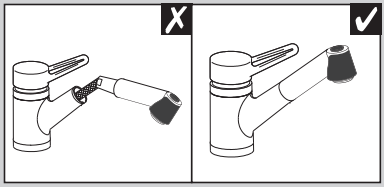

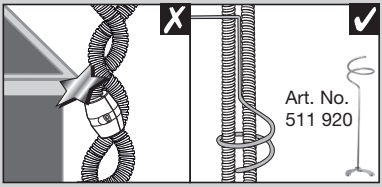
Art. No.
511 920