BLANCO

BLANCO ELOSCOPE-F II HD

Safety and hygiene BLANCO mixer taps

DVGW Certification

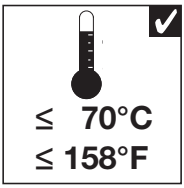

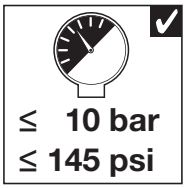

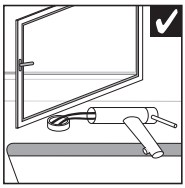

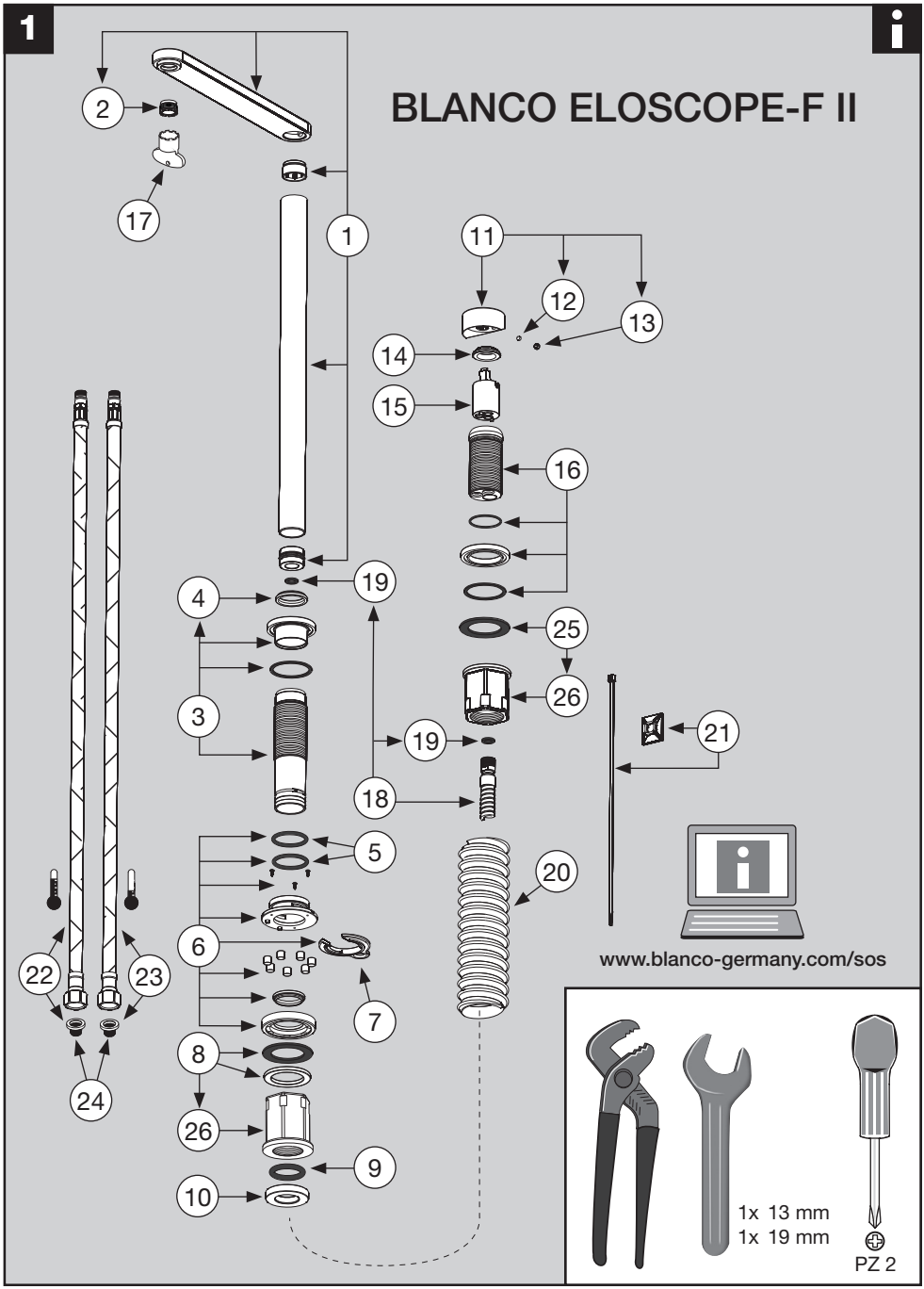
1
BLANCO ELOSCOPE-F II
1
2
3
4
5
6
7
8
9
10
11
12
13
14
15
16
17
18
19
19
20
21
22
23
24
25
26
26
www.blanco-germany.com/sos
1x 13 mm
1x 19 mm
PZ 2

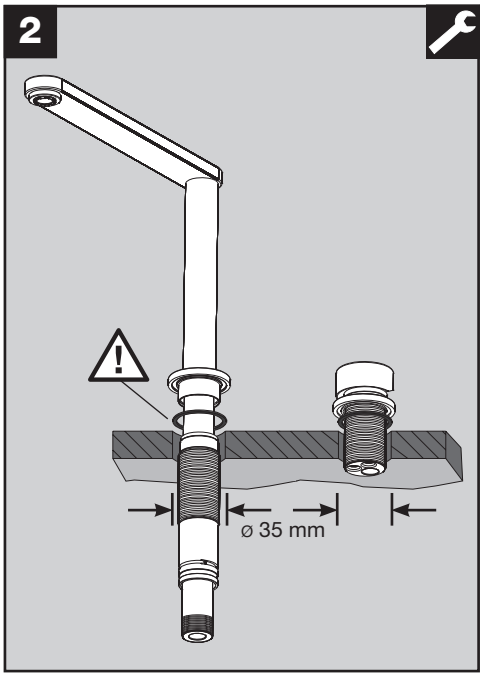
2
ø 35 mm

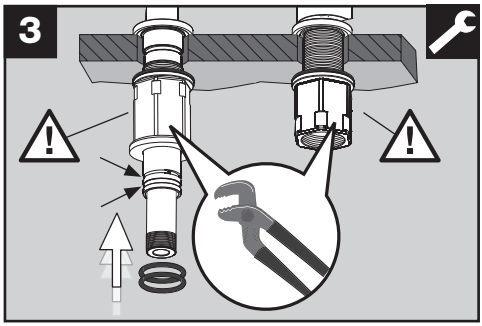
3

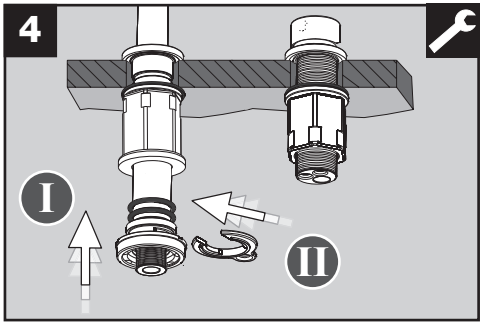
4
I
II

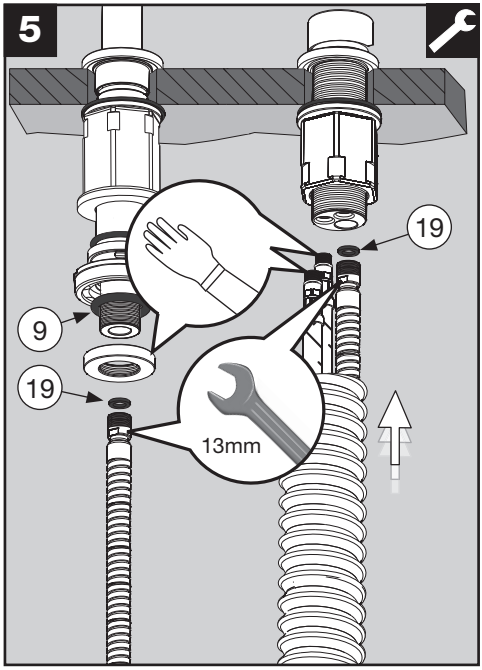
5
19
9
19
13mm

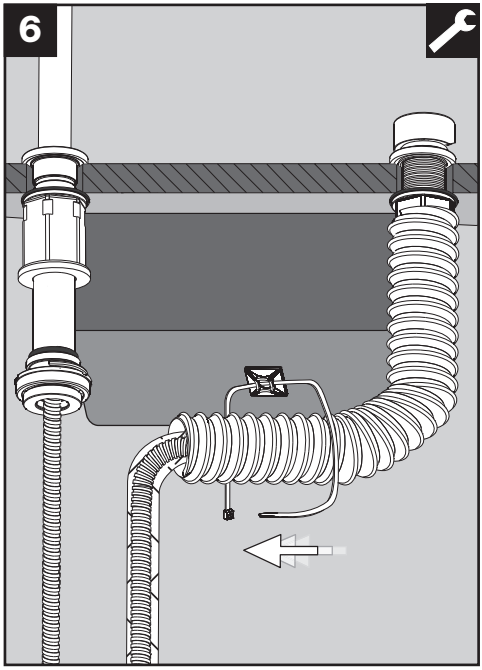
6

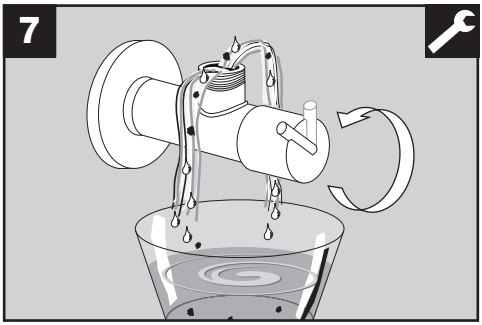

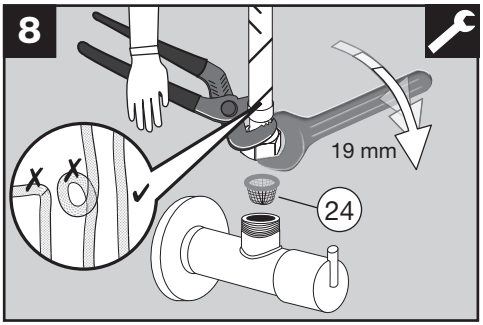

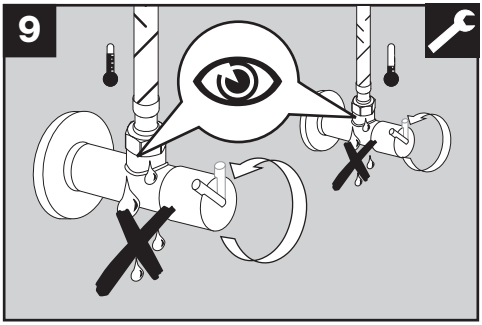

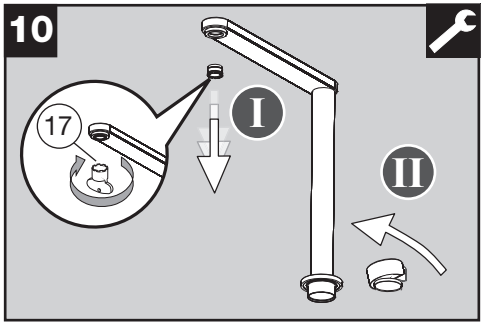

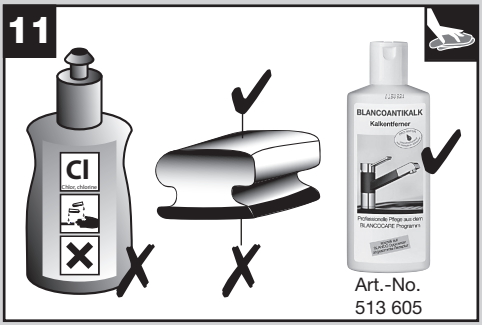

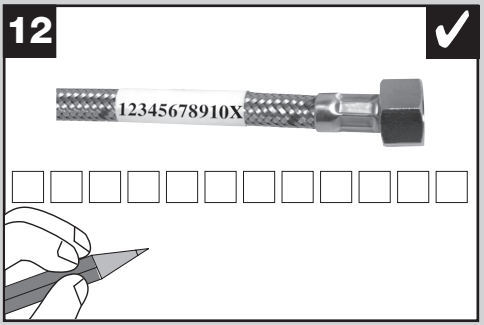

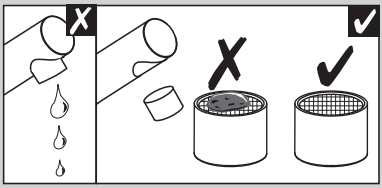

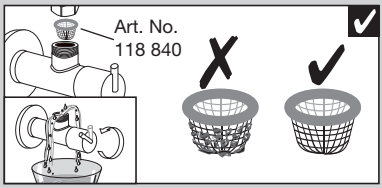

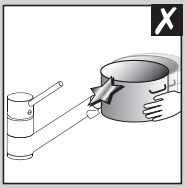

BLANCO
BLANCO GmbH + Co KG · Technischer Kundendienst · Tel.: +49 7045 44-81 419
info@blanco-germany.com · www.blanco-germany.com